SCHEMATICS

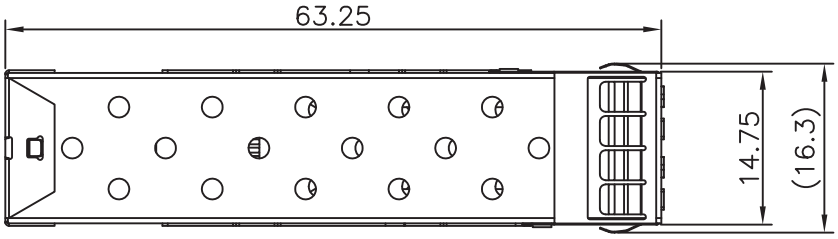

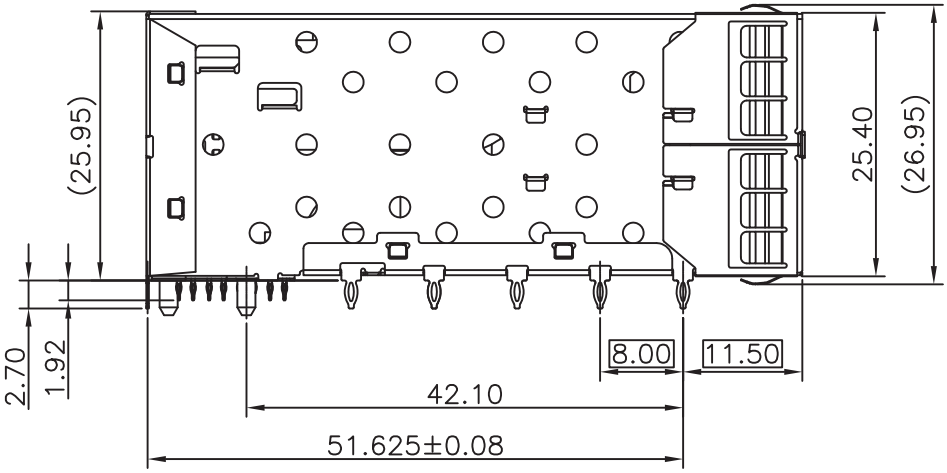

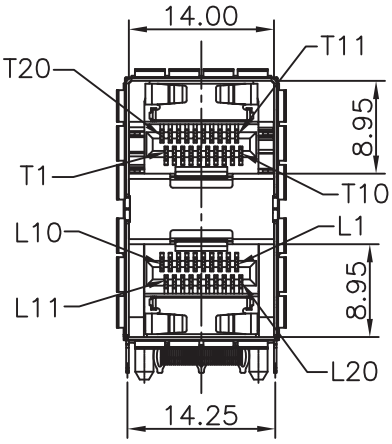

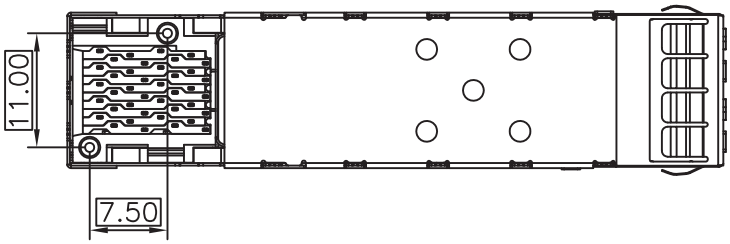

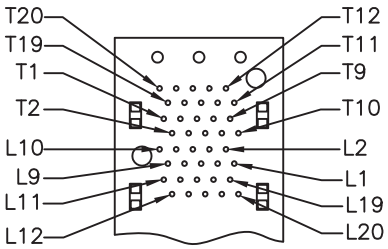

CONNECTOR PIN–OUT
COMPONENT SIDE OF BOARD

NOTES:
MATERIAL:
CAGE: COPPER ALLOY
CONNECTOR:
PLASTIC HOUSING: HIGH TEMPERATURE LCP, UL94 V–0.
LIGHT PIPE: POLYCARBONATE; COLOR: CLEAR
SPRING: STAINLESS STEEL
CONTACTS: PHOSPHOR BRONZE
CONTACT PLATING: 15u" MIN. GOLD ON MATING AREA,
150u" MATTE TIN ON SOLDER TAILS
PACKAGING: TRAY PACKAGING.
TEMPERATURE RANGE: –40°C TO +85°C

Technology & Value	Dimensions:mm Unless otherwise specified, all tolerances are ± 0,25	Approved By: TSLEE	
	SFP+ Cage 2x1 + Connector	Part No:SFPP021PA15	REV. A
Drafted by:ZhangXuan		SHEET 1 OF 4	

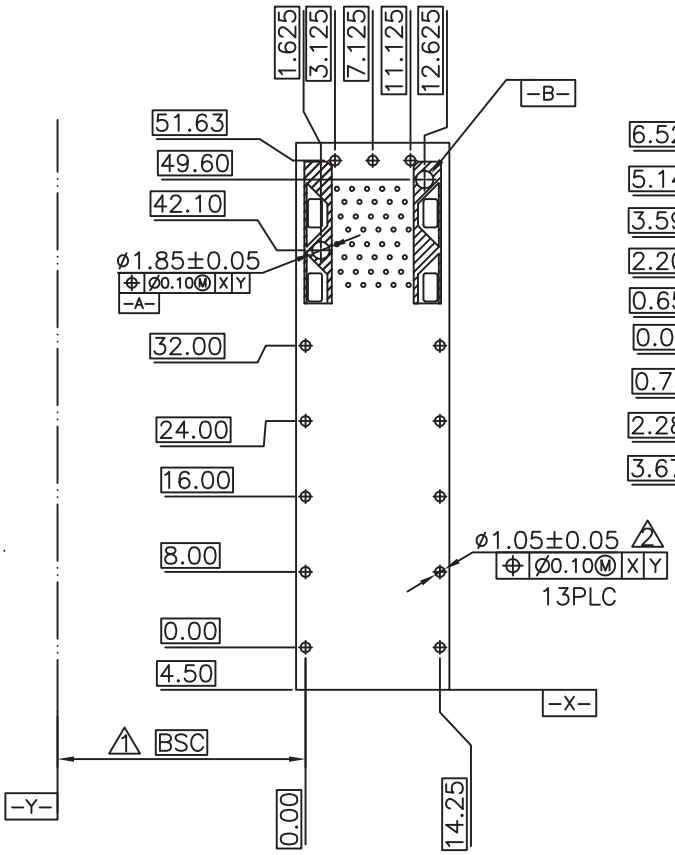

RECOMMENDED PCB CONFIGURATION

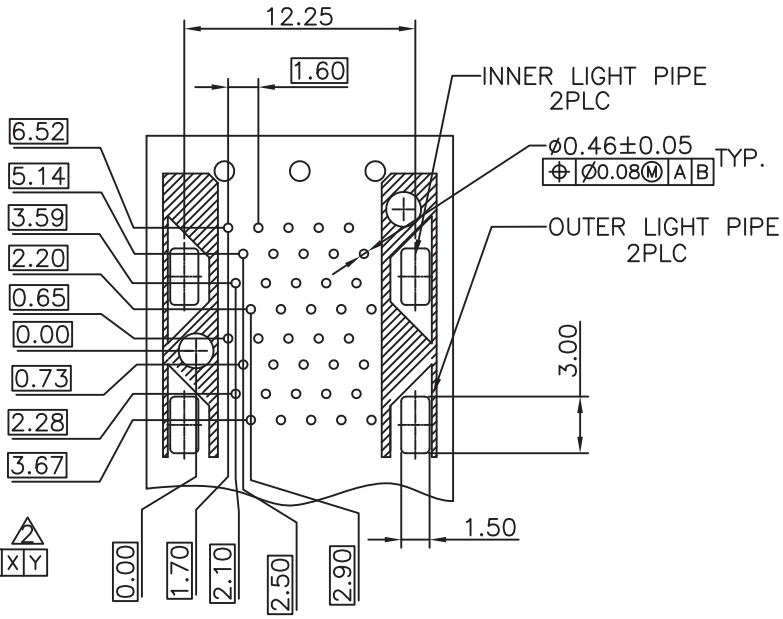

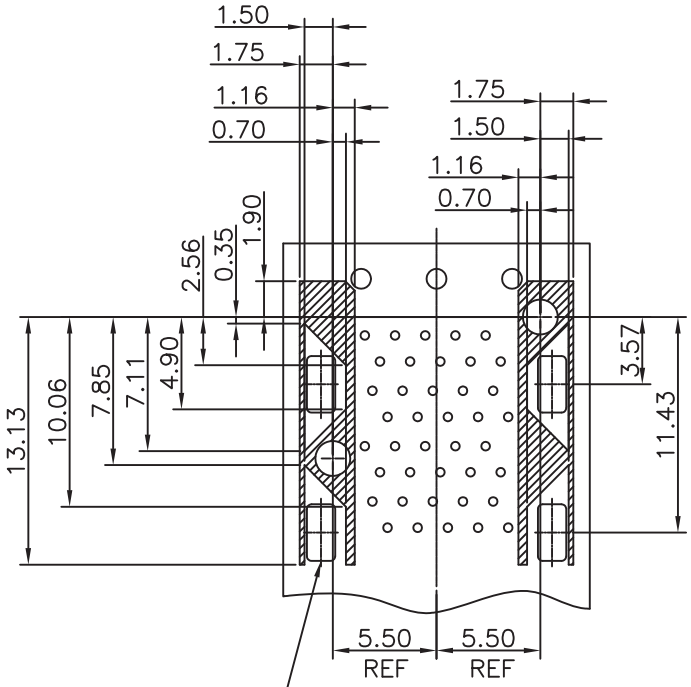

THE HATCHED AREA IN THIS VIEW INDICATES ZONES THAT ARE OCCUPIED BY THE PLASTIC HOUSING THAT SEATS AGAINST THE PCB AND BY THE VERTICAL METAL CAGE WALL THAT STOPS JUST SHORT OF THE PCB

NOTES:

1. DATUM AND BASIC DIMENSIONS ESTABLISHED BY CUSTOMER.
2. 1.05 mm DIAMETER HOLES ARE CHASSIS GROUND .

Technology & Value	Dimensions:mm Unless otherwise specified, all tolerances are ± 0,25	Approved By: TSLEE	
	SFP+ Cage 2x1 + Connector	Part No: SFPP021PA15	REV. A
Drafted by:ZhangXuan		SHEET 2 OF 4	

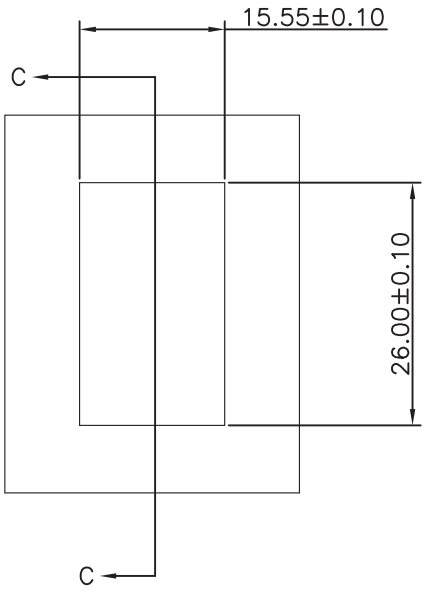

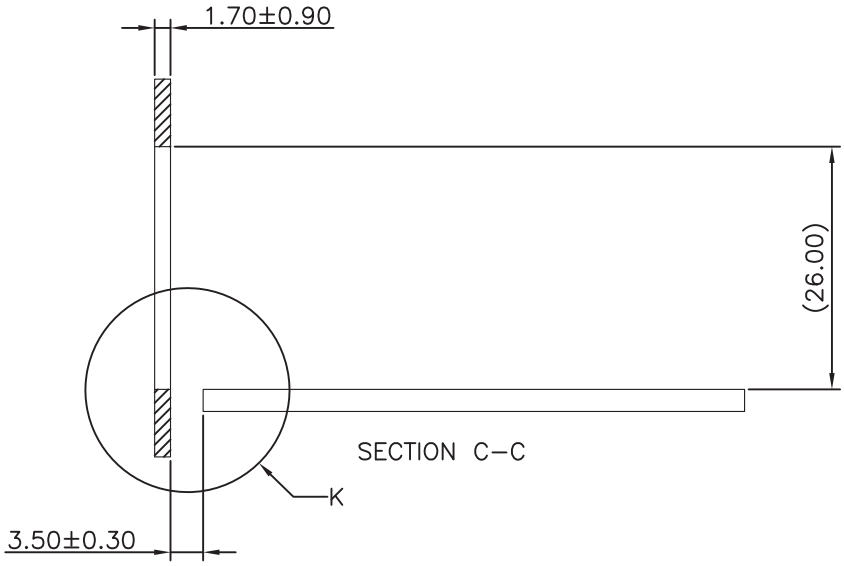

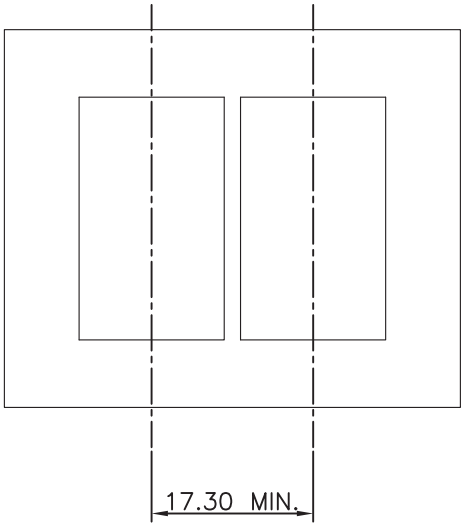

RECOMMENDED BEZEL DESIGN

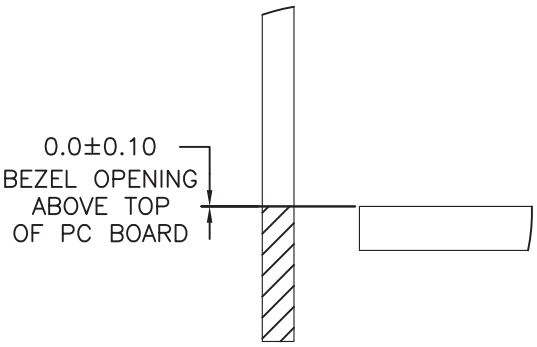

DETAIL K
2:1

Technology & Value	Dimensions:mm Unless otherwise specified, all tolerances are ± 0,25	Approved By: TSLEE	
	SFP+ Cage 2x1 + Connector	Part No:SFPP021PA15	REV. A
Drafted by:ZhangXuan		SHEET 3 OF 4	

PACKAGE INFORMATION AND LABLE

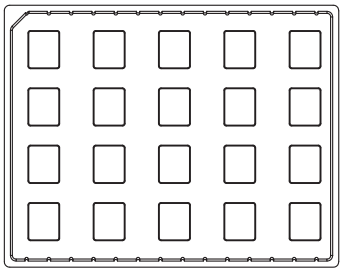

1. PRODUCTS IN TRAYS

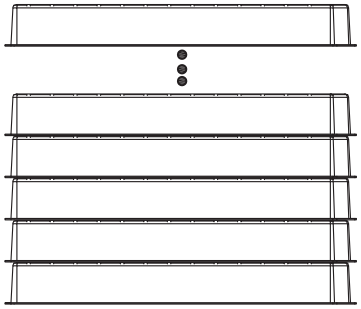

2. TRAYS OVERLAY:
(THE NEXT TRAY NEED ROTATE 180 DEGREE AND
PUT IT ON PREVIOUS TRAY.)
(相邻两个吸塑间水平方向成180度摆放)

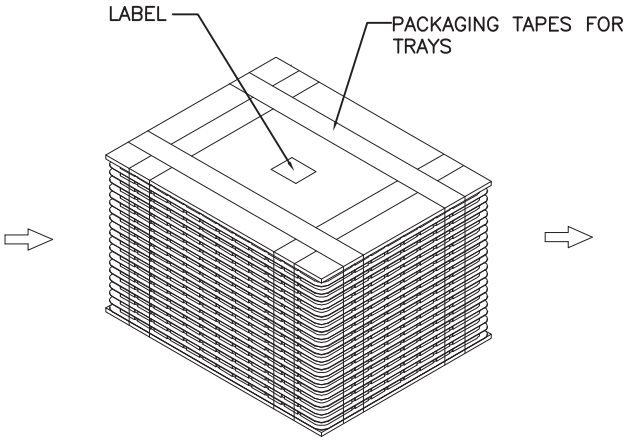

3. LABEL & PACKAGING TAPES FOR TRAYS:

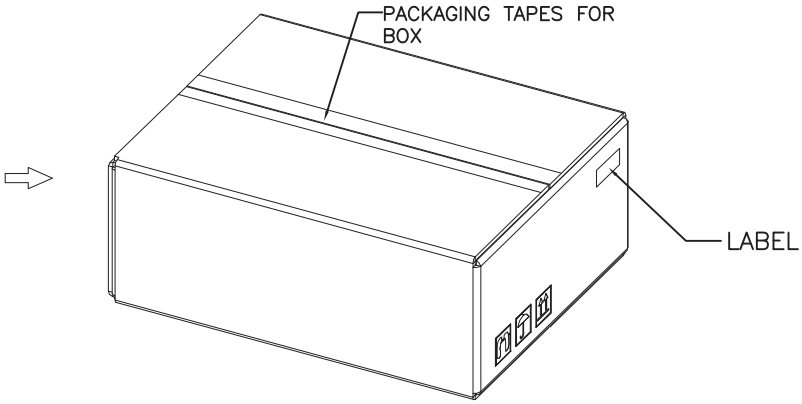

4. LABEL & PACKAGING TAPES FOR BOX

PACKAGING LISTS	
ITEM	Q'TY
PRODUCT	120 PCS
TRAY	6 PCS
BOX(L340*W265*H200MM)	1 PCS
LABLE	2 PCS
PACKAGING TAPES	8 M (ABOUT)

Technology & Value	Dimensions:mm Unless otherwise specified, all tolerances are ± 0,25	Approved By: TSLEE	
	SFP+ Cage 2x1 + Connector	Part No:SFPP021PA15	REV. A
Drafted by:ZhangXuan			SHEET 4 OF 4