SCHEMATICS

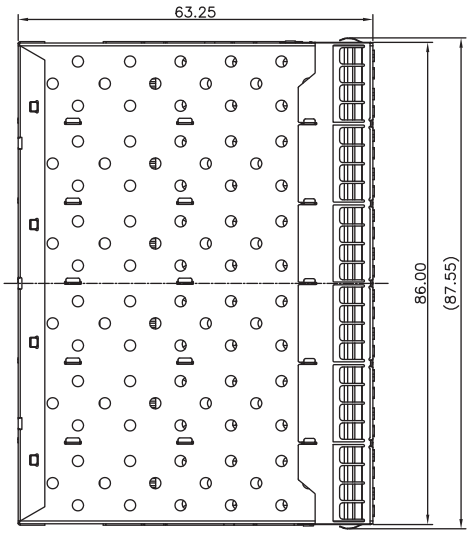

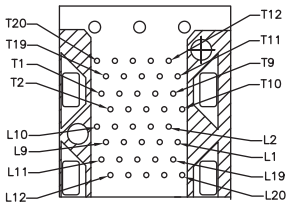

CONNECTOR PIN-OUT
COMPONENT SIDE OF BOARD

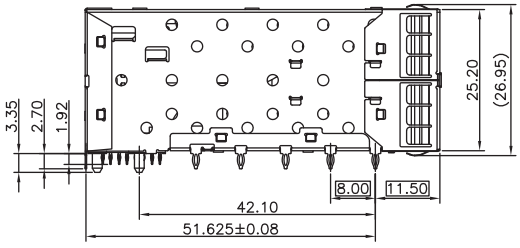

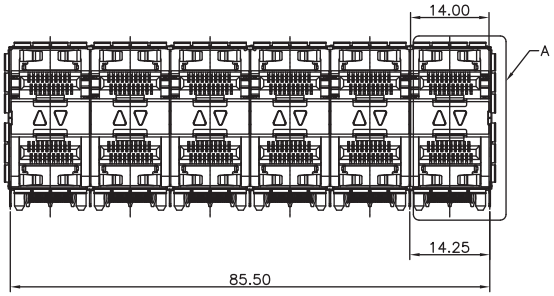

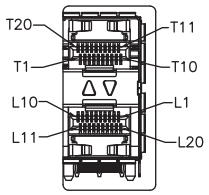

DETAIL A
1:1

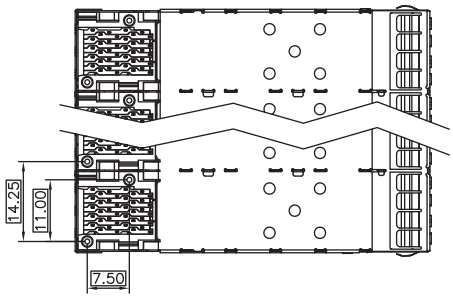

NOTES:

MATERIAL:
CAGE: COPPER ALLOY 30u" MIN NI-PLATED,THICKNESS 0.25 MM
CONNECTOR:
PLASTIC HOUSING: HIGH TEMPERATURE LCP, UL94 V-0.
LIGHT PIPE: POLYCARBONATE; COLOR: CLEAR
SPRING: STAINLESS STEEL
CONTACTS: PHOSPHOR BRONZE
CONTACT PLATING: 15u" MIN. GOLD ON MATING AREA,
150u" MATTE TIN ON SOLDER TAILS

PACKAGING: TRAY PACKAGING.

TEMPERATURE RANGE: -40°C TO +85°C
STORAGE TEMPERATURE: -55°C TO +105°C

Technology & Value	Dimensions:mm Unless otherwise specified, all tolerances are ± 0,25	Approved By: TSLEE
Drafted by:ZhangXian	SFP+ Cage 2x6 + Connector Inner Light Pipes, 15uinch gold	Part No: SFPP026PD15 REV. A SHEET 1 OF 4

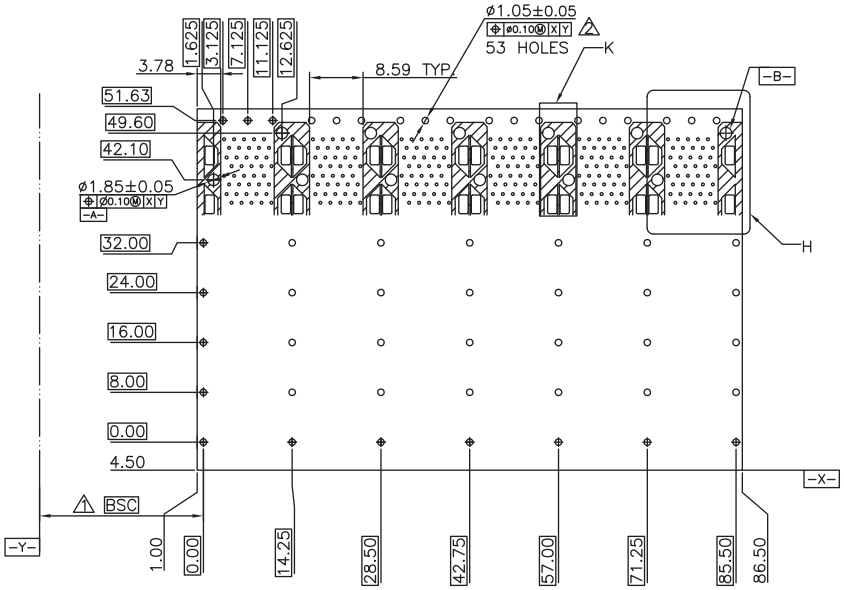

RECOMMENDED PCB CONFIGURATION

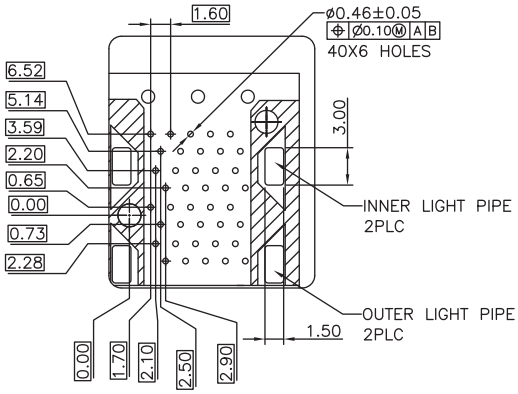

DETAIL H
2:1

NOTES:

1. DATUM AND BASIC DIMENSIONS ESTABLISHED BY CUSTOMER.
2. 1.05 mm DIAMETER HOLES ARE CHASSIS GROUND.

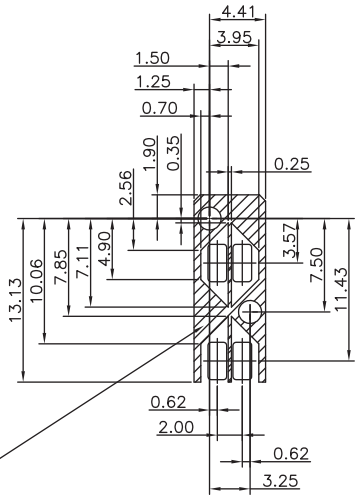

THE ENTIRE AREA OF THE CONNECTOR FOOTPRINT TO BE CONSIDERED THE KEEP OUT AREA FOR COMPONENTS
(OTHER THAN LIGHT PIPE LED'S)
THIS AREA IS INDICATED BY THE ANSI31 LINE

DETAIL LIGHT PIPE LOCATION AND OTHER ZONES
DETAIL K
2:1

Technology & Value	Dimensions:mm Unless otherwise specified, all tolerances are ± 0,25	Approved By: TSLEE	
Drafted by:ZhangXian	SFP+ Cage 2x6 + Connector Inner Light Pipes, 15uinch gold	Part No: SFPP026PD15	REV. A
			SHEET 2 OF 4

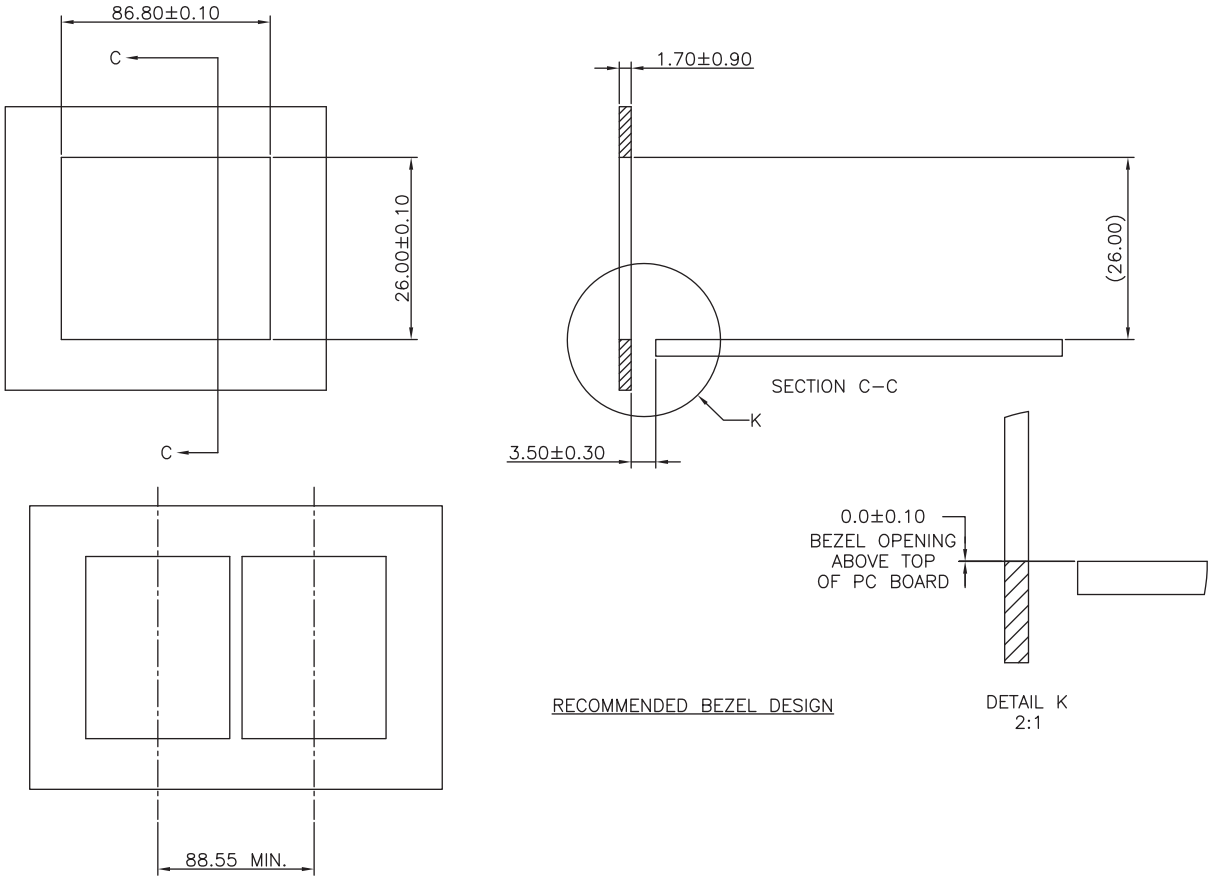

Technology & Value	Dimensions:mm Unless otherwise specified, all tolerances are ± 0,25	Approved By: TSLEE
Drafted by:ZhangXian	SFP+ Cage 2x6 + Connector Inner Light Pipes, 15uinch gold	Part No: SFPP026PD15 REV. A SHEET 3 OF 4

PACKAGE INFORMATION AND LABLE

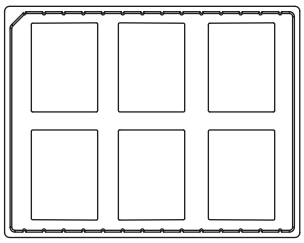

1. 6PCS PRODUCTS IN TRAYS

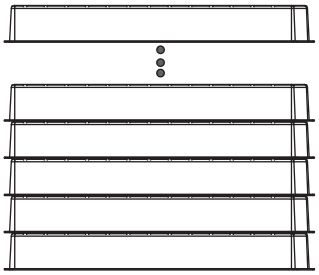

2. 4PCS TRAYS OVERLAY:
(THE NEXT TRAY NEED ROTATE 180 DEGREE AND
PUT IT ON PREVIOUS TRAY.)

PACKAGING LISTS	
ITEM	Q'TY
PRODUCT	24 PCS
TRAY	4 PCS
BOX(L340*W265*H200MM)	1 PCS
LABLE	2 PCS
PACKAGING TAPES	8 M (ABOUT)

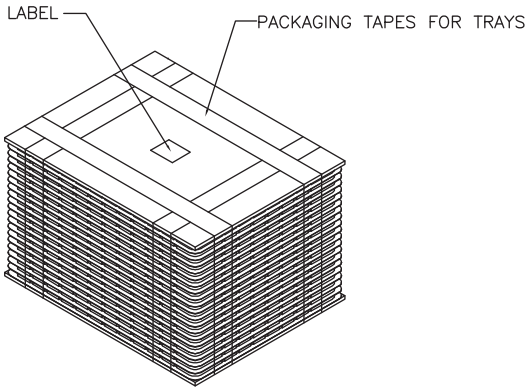

3. LABEL & PACKAGING TAPES FOR TRAYS:

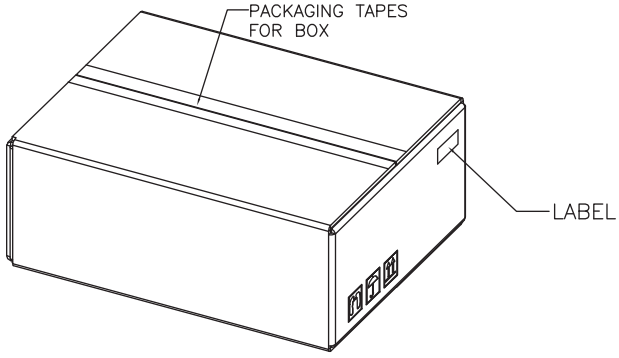

4. LABEL & PACKAGING TAPES FOR BOX

Technology & Value	Dimensions:mm Unless otherwise specified, all tolerances are ± 0,25	Approved By: TSLEE
Drafted by:ZhangXian	SFP+ Cage 2x6 + Connector Inner Light Pipes, 15uinch gold	Part No: SFPP026PD15 REV. A SHEET 4 OF 4